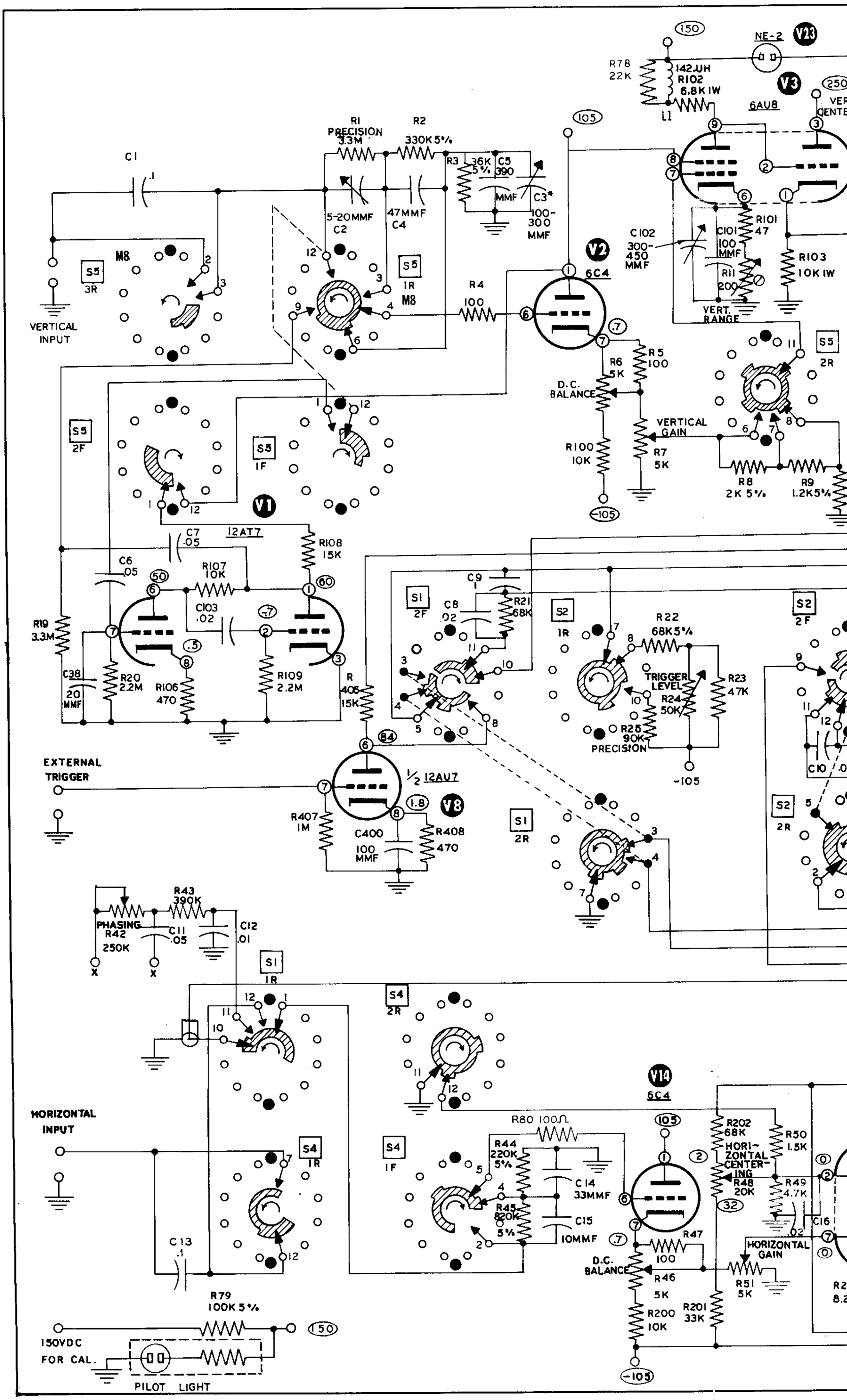
150
NE-2
V23
R78
22K
142μH
R102
6.8K 1W
L1
V3
6AU8
250
VER
CENTE
105
R1
PRECISION
3.3M
R2
330K 5%
C1
.1
R3
36K
5%
C5
390
MMF
C3*
100-
300
MMF
5-20MMF
C2
47MMF
C4
M8
S5
3R
VERTICAL
INPUT
S5
1R
M8
V2
6C4
R4
100
C102
300-
450
MMF
C101
100
MMF
R101
47
R11
200
R103
10K 1W
VERT.
RANGE
S5
2R
R5
100
R6
5K
D.C.
BALANCE
VERTICAL
GAIN
R100
10K
R7
5K
R8
2K 5%
R9
1.2K5%
-105
S5
2F
S5
1F
V1
12AT7
C7
.05
R108
15K
C6
.05
R107
10K
C103
.02
R19
3.3M
C38
20
MMF
R20
2.2M
R106
470
R109
2.2M
R
406
15K
S1
2F
C9
C8
.02
R21
68K
S2
1R
R22
68K5%
TRIGGER
LEVEL
R24
50K
R23
47K
R25
90K
PRECISION
-105
S2
2F
C10
S2
2R
EXTERNAL
TRIGGER
½ 12AU7
V8
R407
1M
C400
100
MMF
R408
470
S1
2R
R43
390K
PHASING
R42
250K
C11
.05
C12
.01
S1
1R
S4
2R
V14
6C4
HORIZONTAL
INPUT
S4
1R
S4
1F
R80 100Ω
R44
220K
5%
R45
820K
5%
C14
33MMF
C15
10MMF
R202
68K
HORI-
ZONTAL
CENTER-
ING
R48
20K
R50
1.5K
R49
4.7K
C16
.02
HORIZONTAL
GAIN
R51
5K
R47
100
D.C.
BALANCE
R46
5K
R200
10K
R201
33K
C13
.1
R79
100K 5%
150VDC
FOR CAL.
PILOT LIGHT

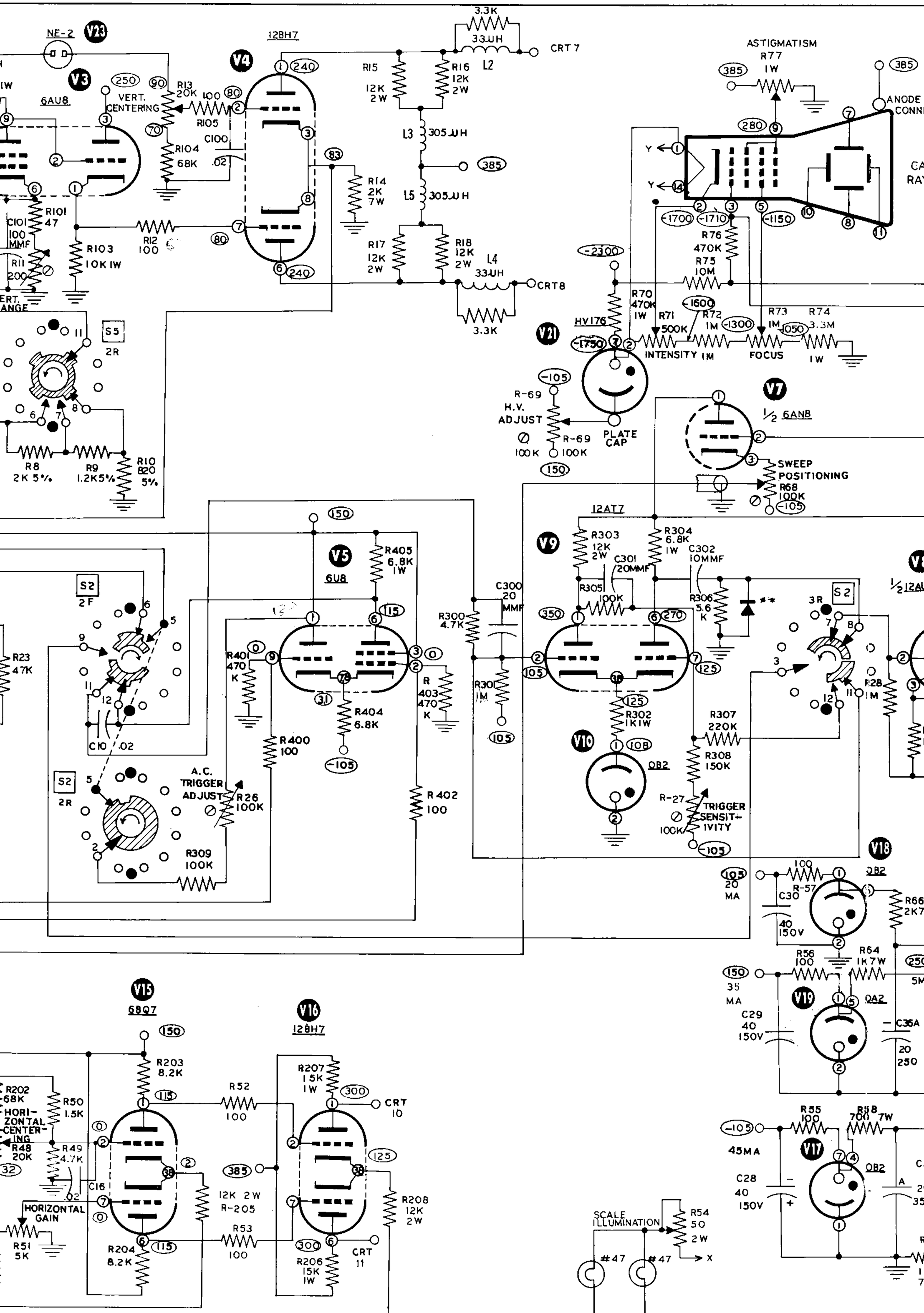
NE-2
V23
V3
6AU8
VERT. CENTERING
R13 20K
R105 100
C100 .02
R104 68K
V4
12BH7
R15 12K 2W
R16 12K 2W
3.3K
33UH
L2
CRT 7
L3 305UH
L5 305UH
R14 2K 7W
R17 12K 2W
R18 12K 2W
L4 33UH
CRT8
3.3K
R101 47
C101 100 MMF
R11 200
VERT. RANGE
R103 10K 1W
R12 100
S5
2R
R8 2K 5%
R9 1.2K 5%
R10 820 5%
ASTIGMATISM
R77 1W
ANODE CONN
R76 470K
R75 10M
R70 470K 1W
R71 500K
R72 1M
R73 1M
R74 3.3M 1W
INTENSITY
FOCUS
HV176
V21
R-69 H.V. ADJUST
R-69 100K
PLATE CAP
V7
1/2 6AN8
SWEEP POSITIONING
R68 100K
12AT7
V9
R303 12K 2W
R304 6.8K 1W
C301 20MMF
C302 10MMF
R305 100K
R306 5.6K
C300 20 MMF
R300 4.7K
R301 1M
R302 1K1W
R307 220K
R308 150K
V10
OB2
R-27 TRIGGER SENSITIVITY 100K
V5
6U8
R405 6.8K 1W
R401 470K
R400 100
R404 6.8K
R403 470K
R402 100
S2
2F
R23 47K
C10 .02
S2
2R
A.C. TRIGGER ADJUST
R26 100K
R309 100K
V18
OB2
R-57
C30 40 150V
R66 2K7
R56 100
R64 1K7W
V19
OA2
C29 40 150V
C36A 20 250
R55 100
R58 700 7W
V17
OB2
C28 40 150V
V15
6BQ7
V16
12BH7
R203 8.2K
R202 68K
HORIZONTAL CENTERING R48 20K
R50 1.5K
R49 4.7K
C16 .02
HORIZONTAL GAIN
R51 5K
R204 8.2K
R52 100
R53 100
12K 2W R-205
R207 15K 1W
R208 12K 2W
R206 15K 1W
CRT 10
CRT 11
SCALE ILLUMINATION
R54 50 2W
#47
#47

HEATHKIT
PROFESSIONAL OSCILLOSCOPE
MODEL OP-1

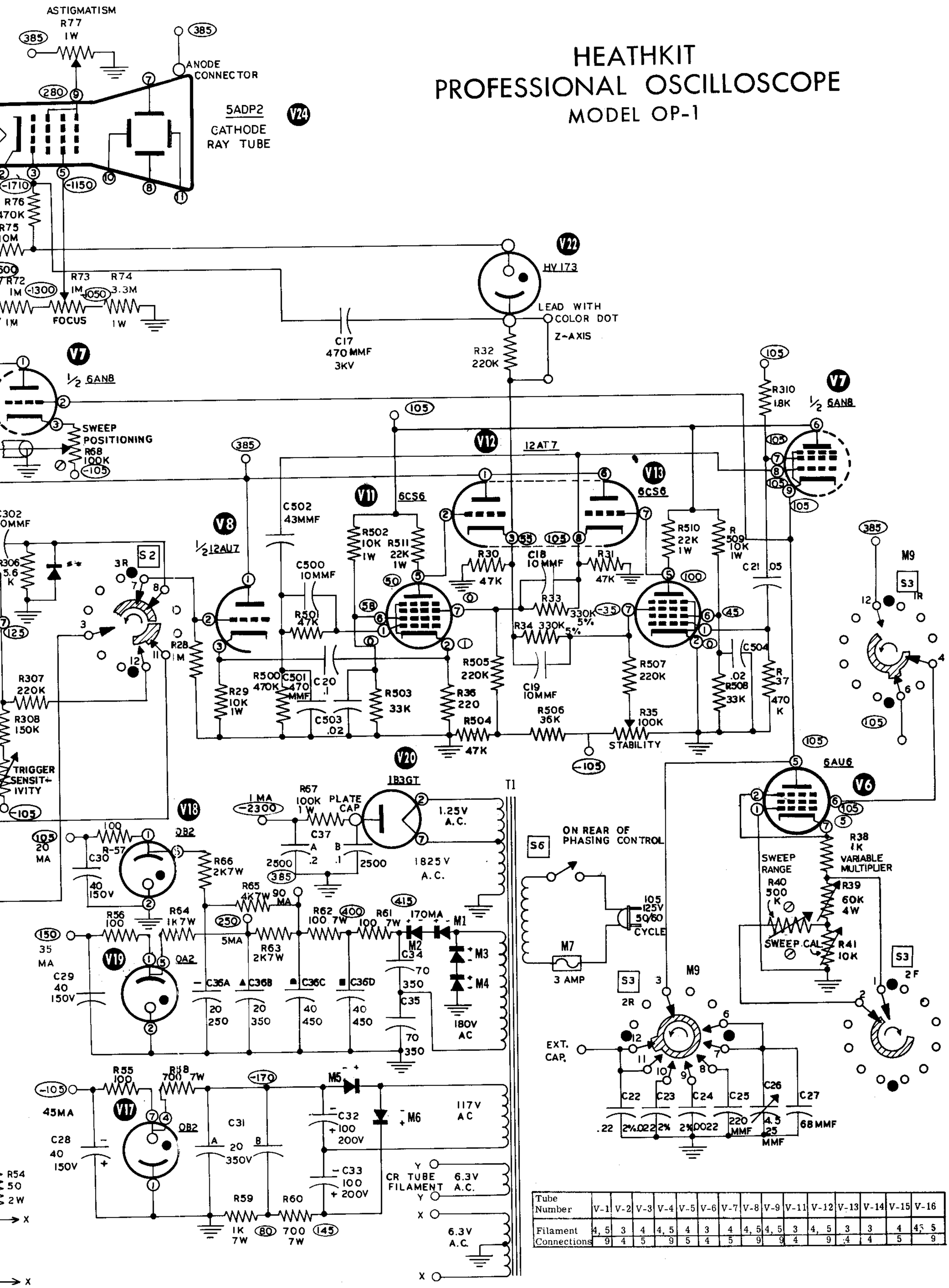

Tube Number	V-1	V-2	V-3	V-4	V-5	V-6	V-7	V-8	V-9	V-11	V-12	V-13	V-14	V-15	V-16
Filament Connections	4, 5 9	3 4	4 5	4, 5 9	4 5	3 4	4 5	4, 5 9	4, 5 9	3 4	4, 5 9	3 4	3 4	4 5	4, 5 9